HOIST®
FITNESS SYSTEMS

S302
PECTORAL FLY

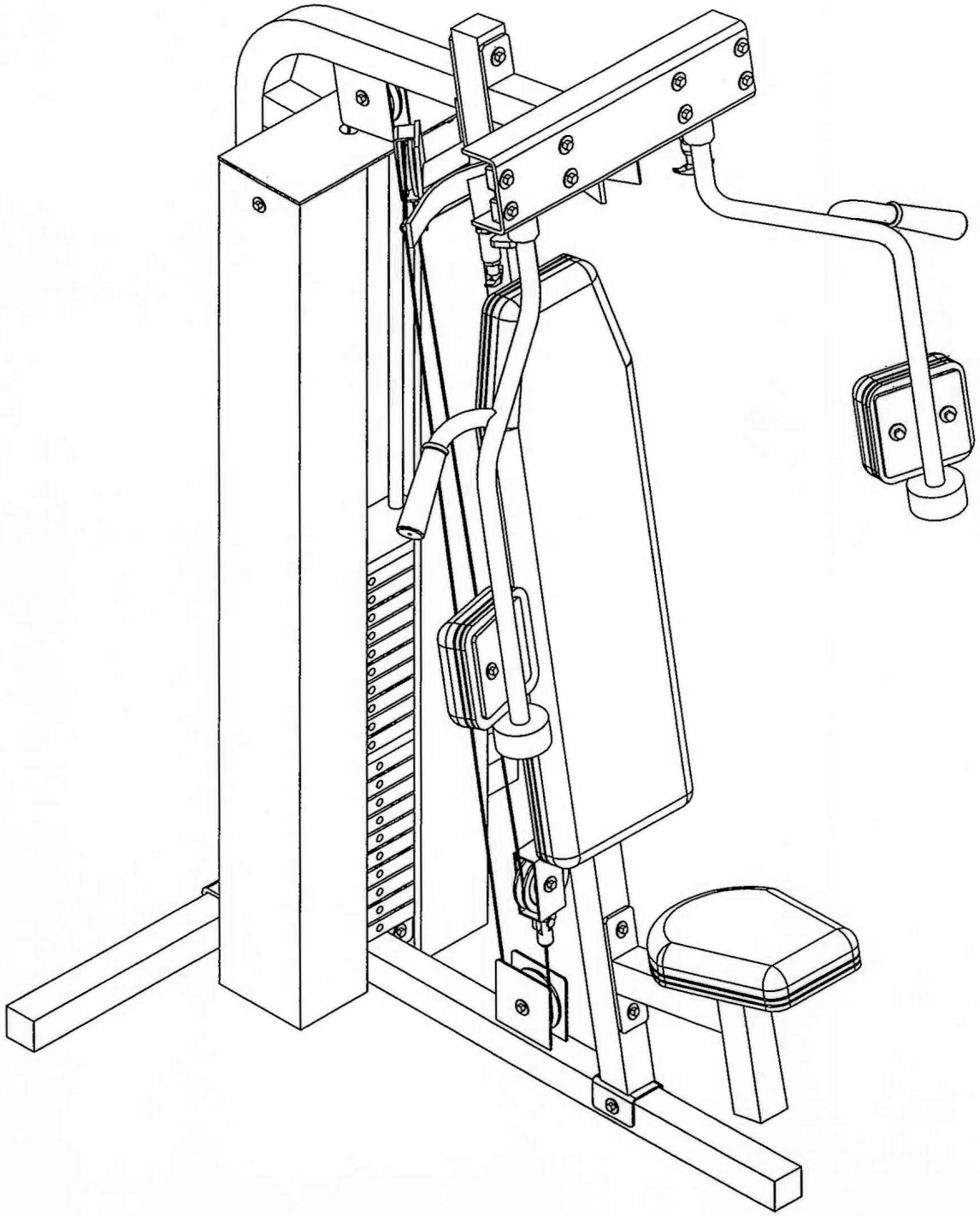

CUSTOMER CATALOG

October '95

S302
PECTORAL FLY

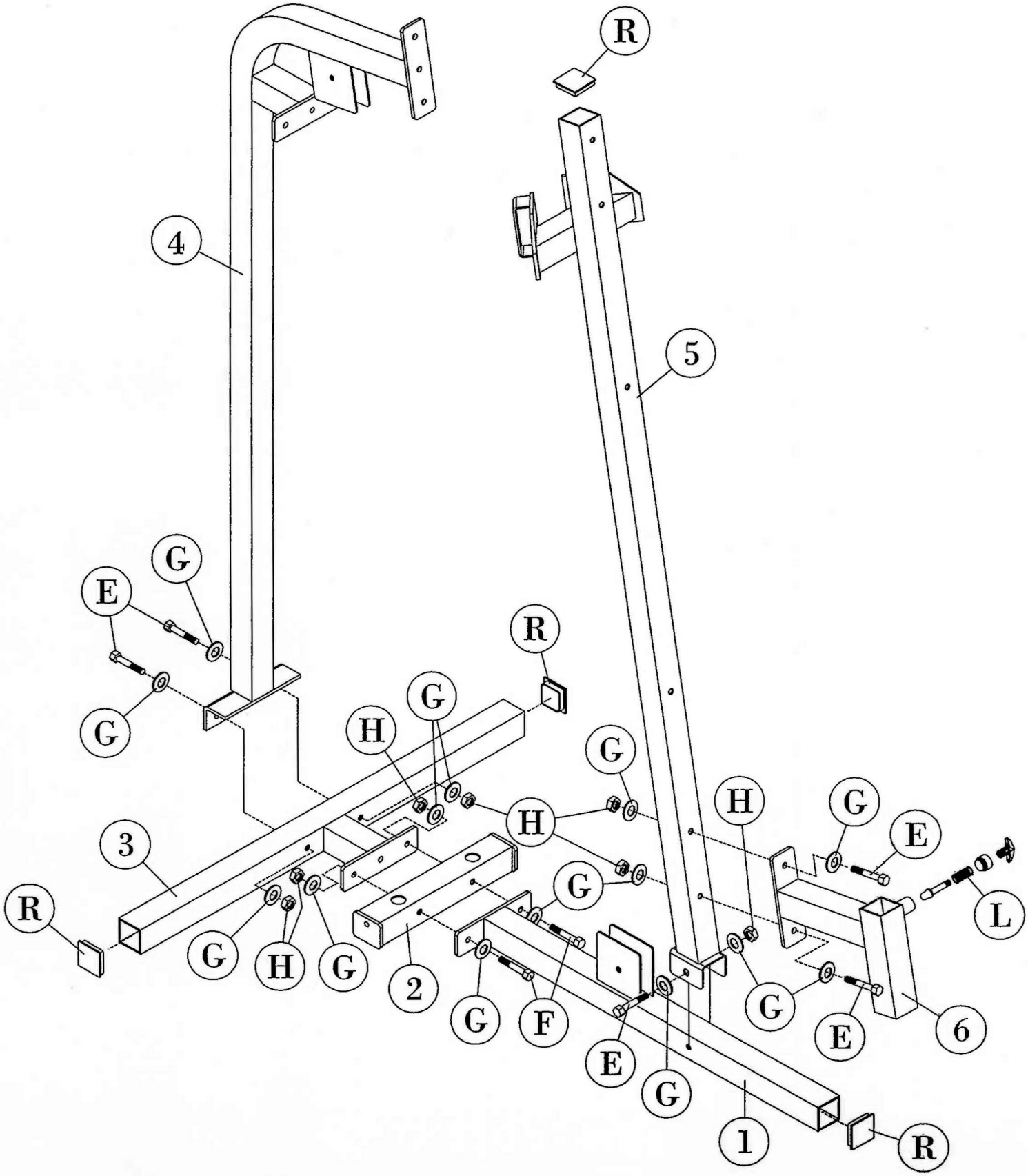

S302
PECTORAL FLY

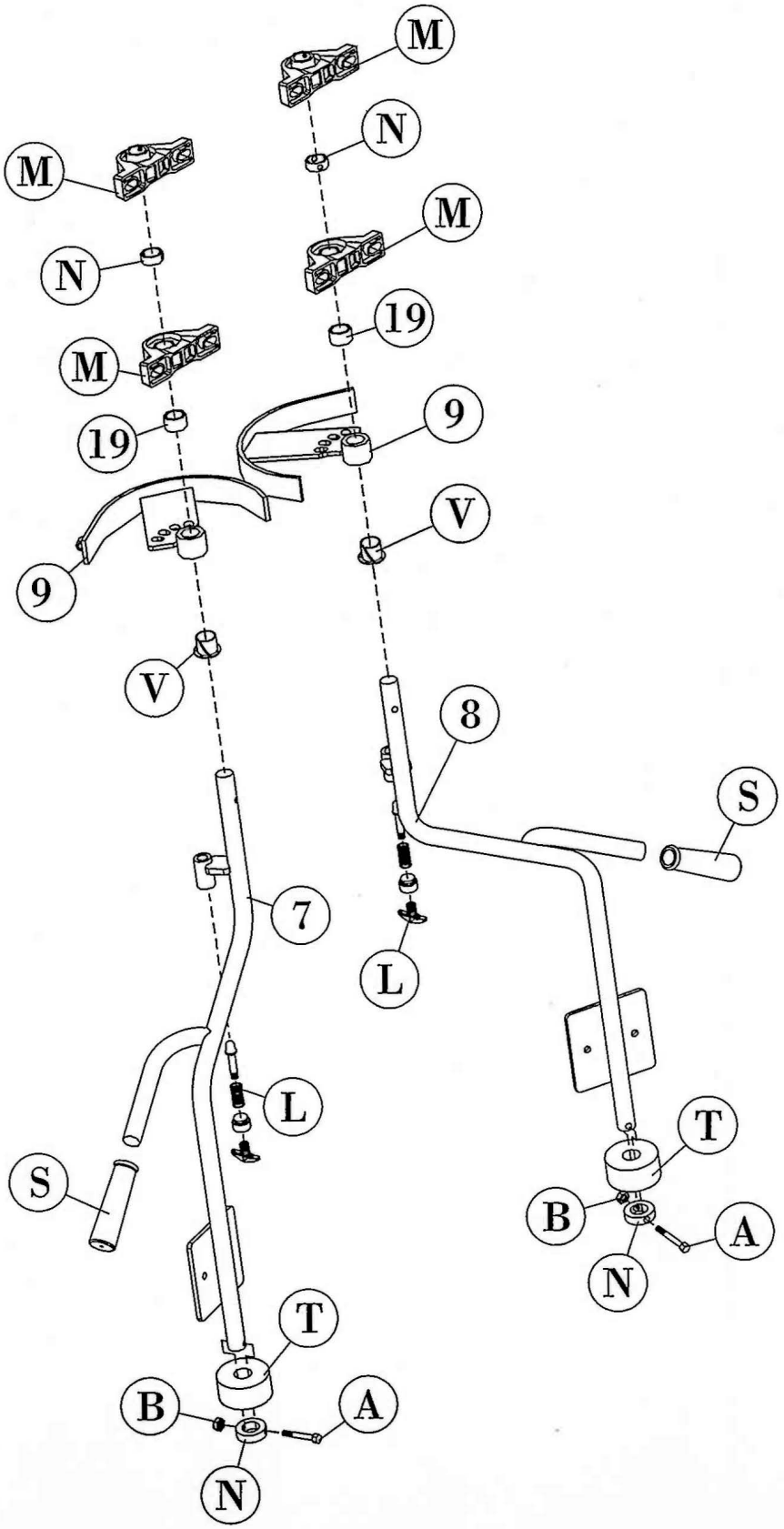

S302
PECTORAL FLY

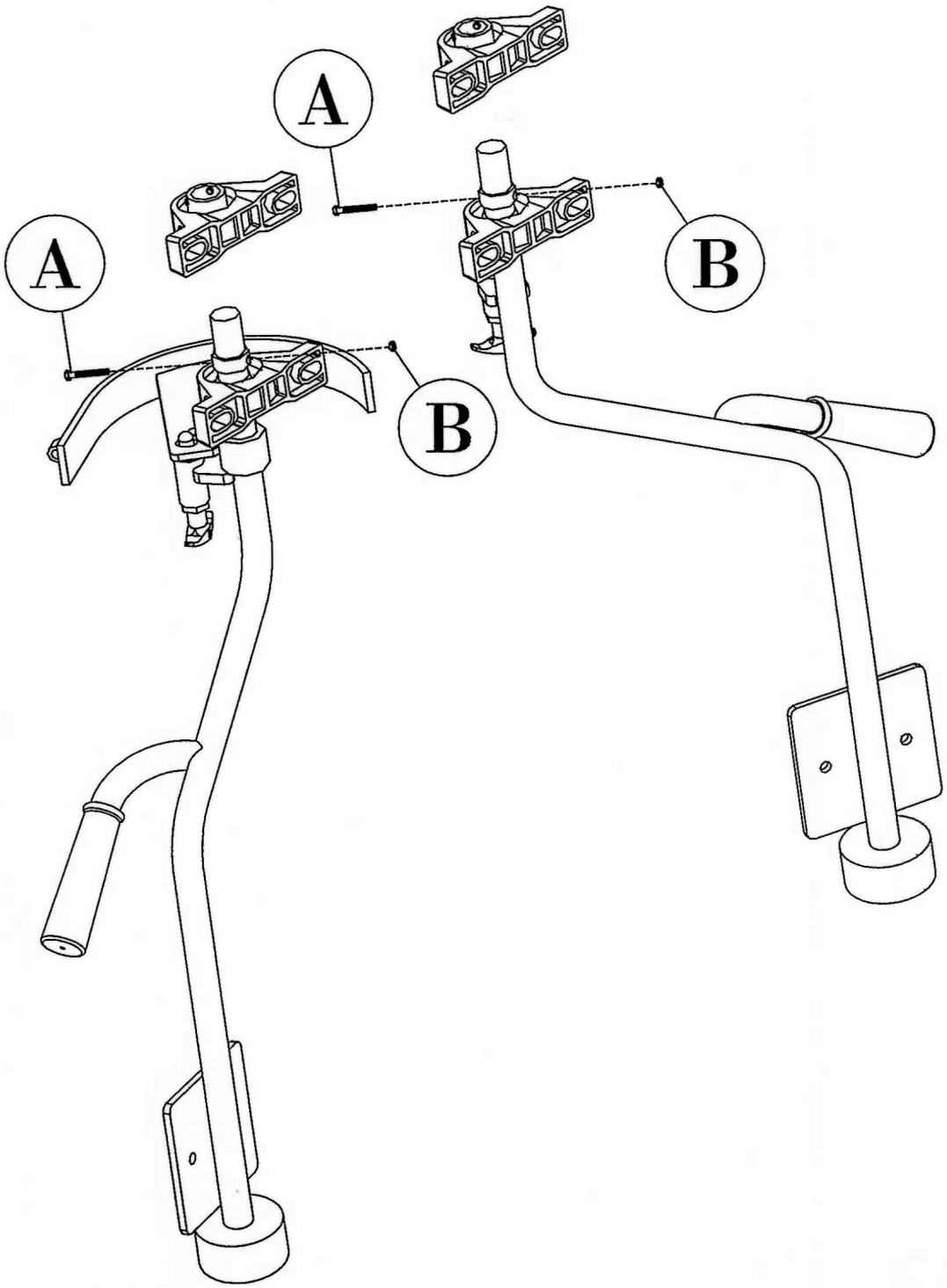

S302
PECTORAL FLY

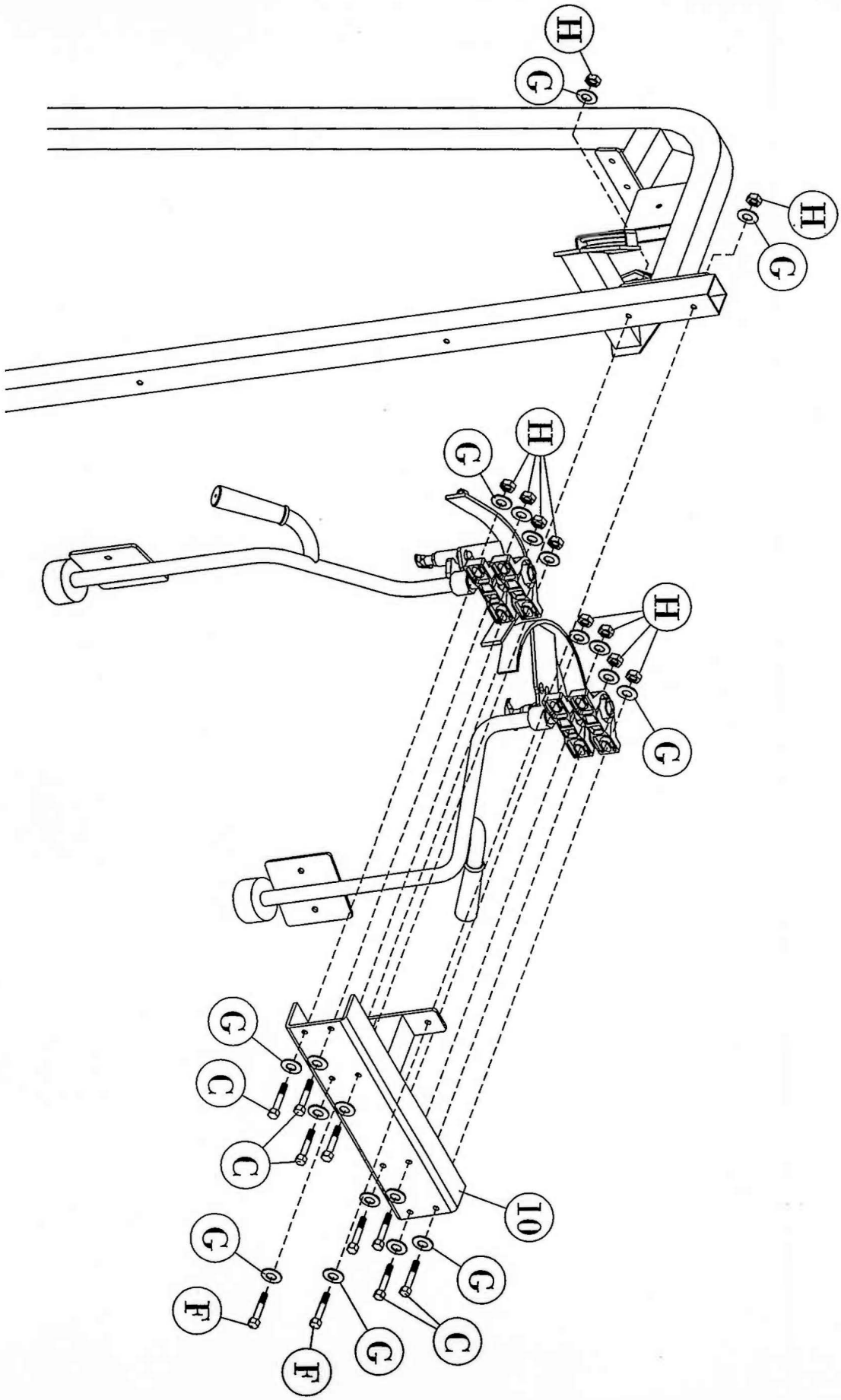

S302
PECTORAL FLY

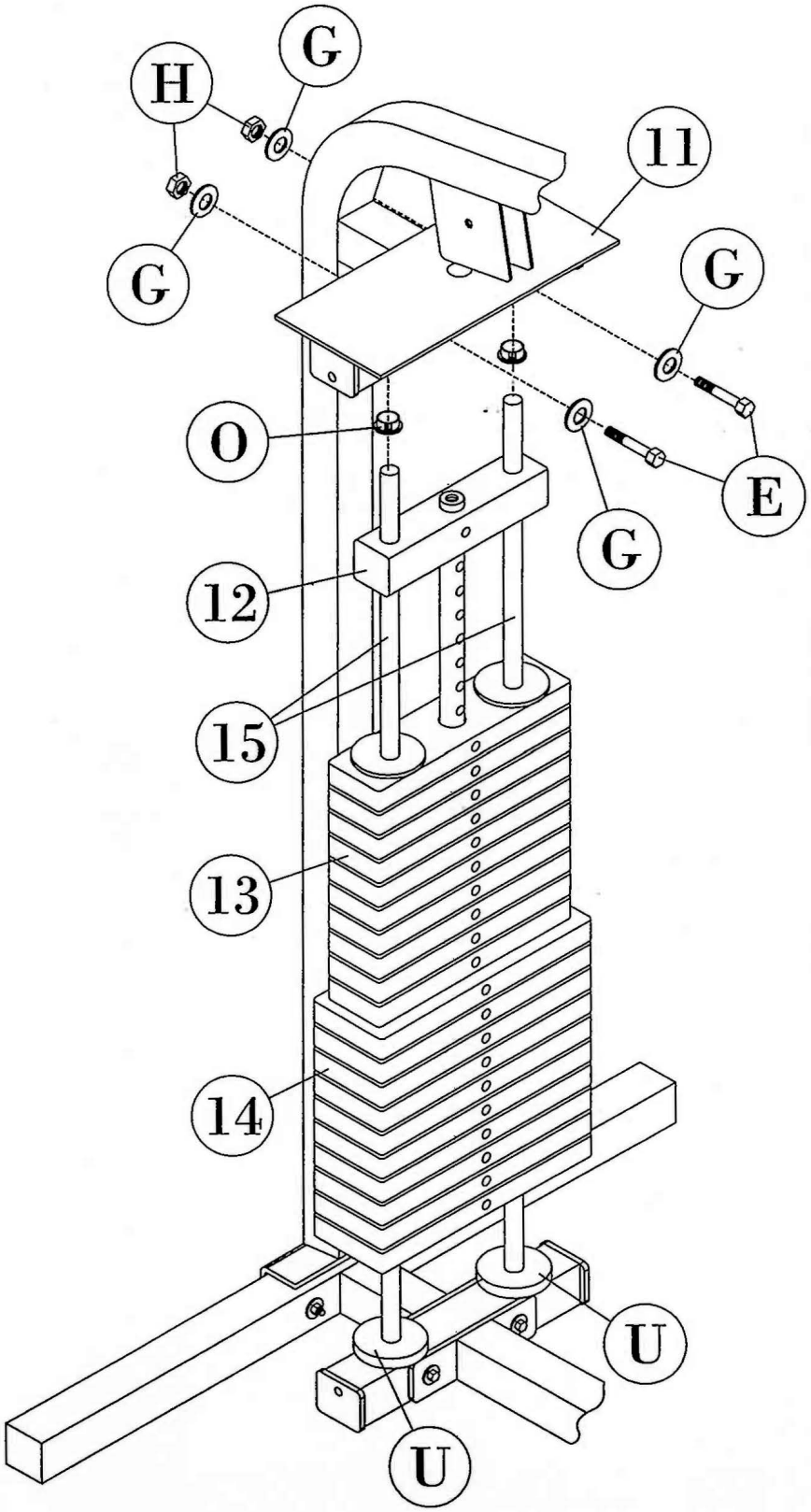

S302
PECTORAL FLY

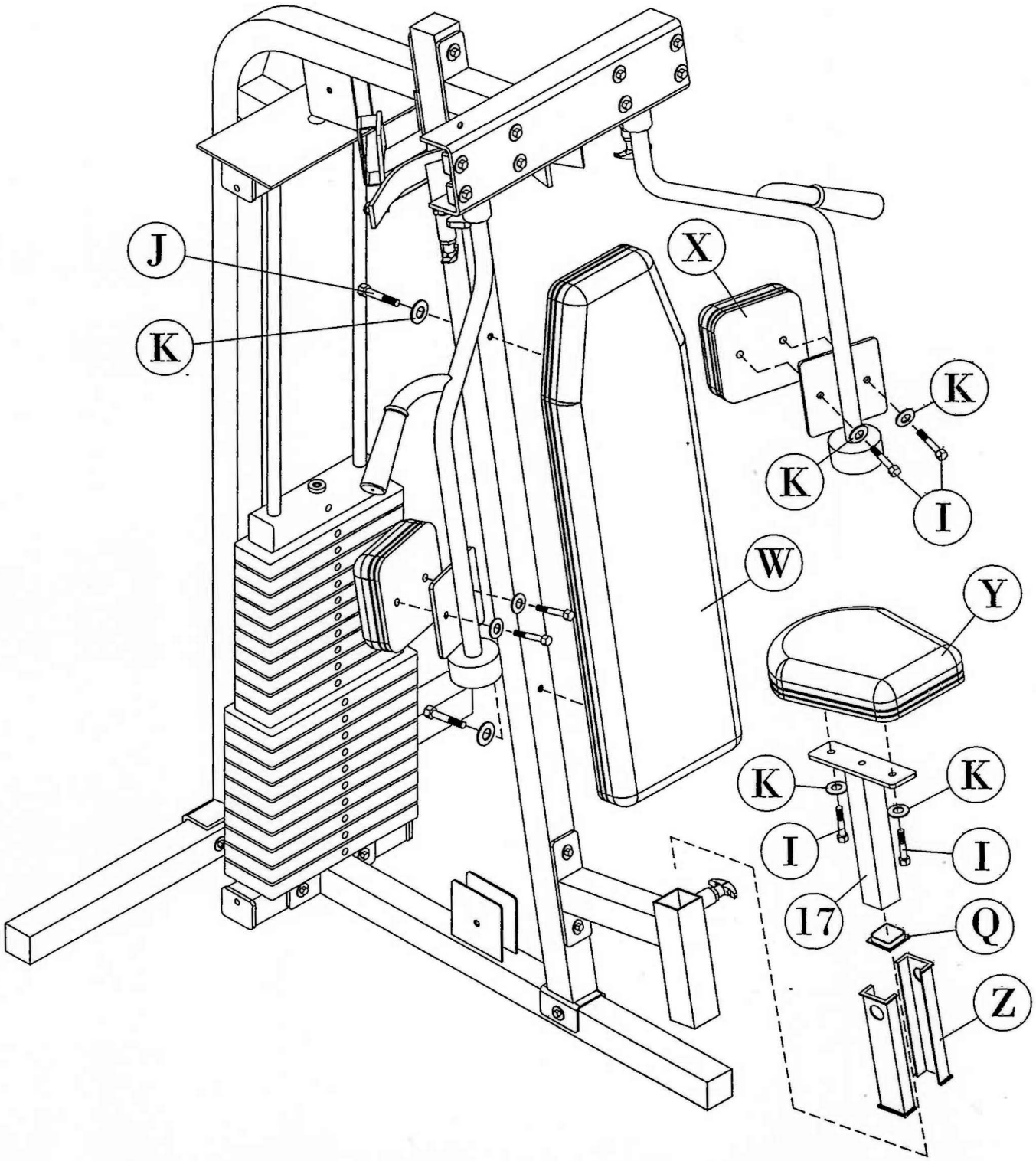

S302
PECTORAL FLY

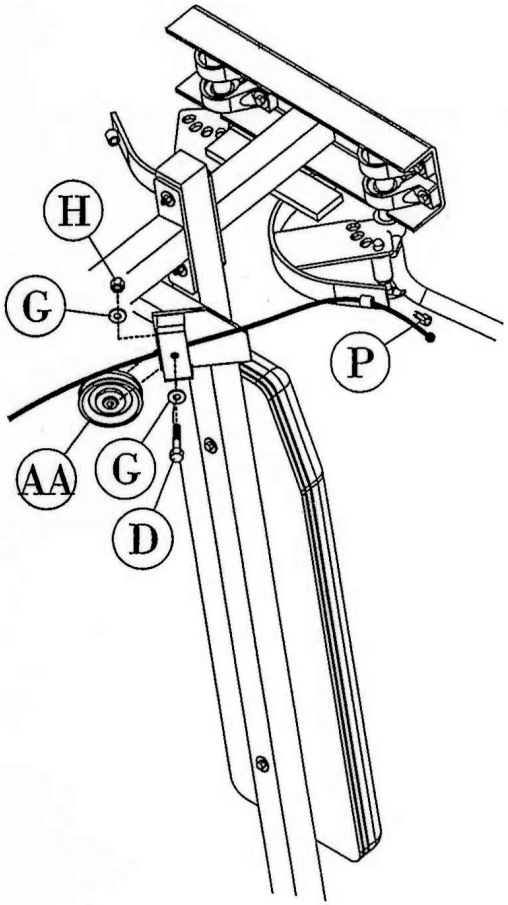

STEP 1

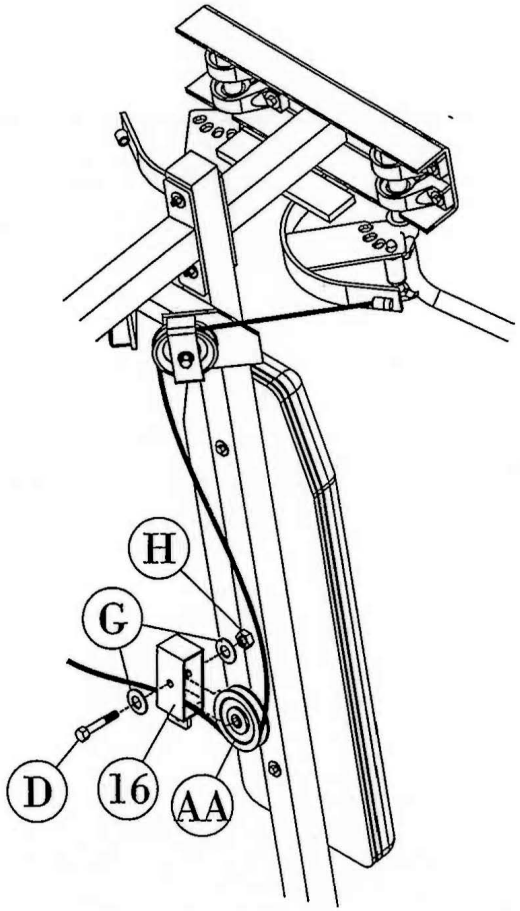

STEP 2

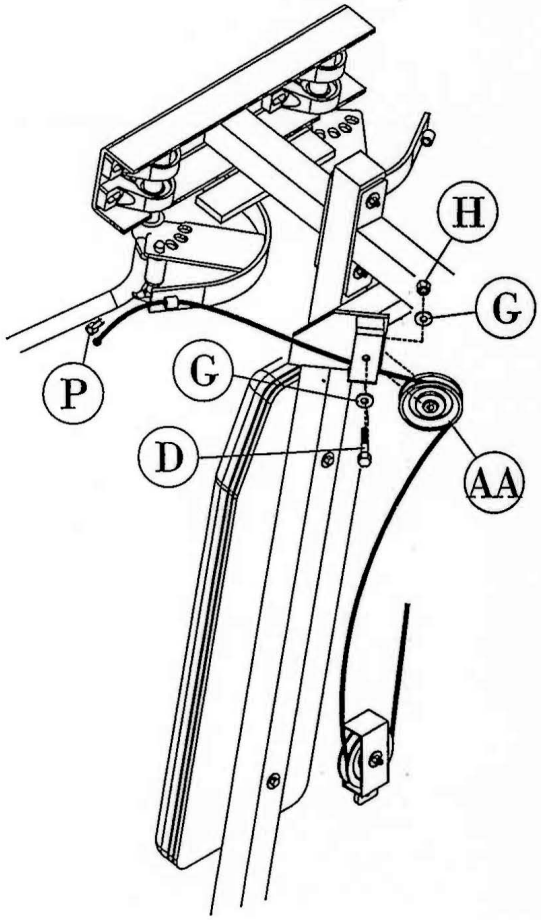

STEP 3

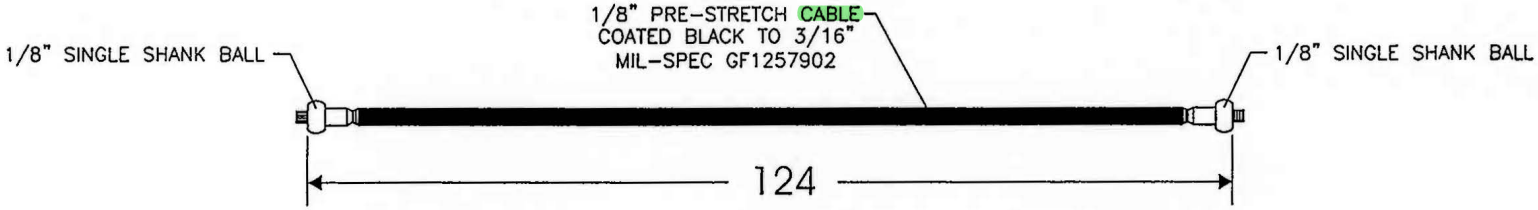

S302
PECTORAL FLY

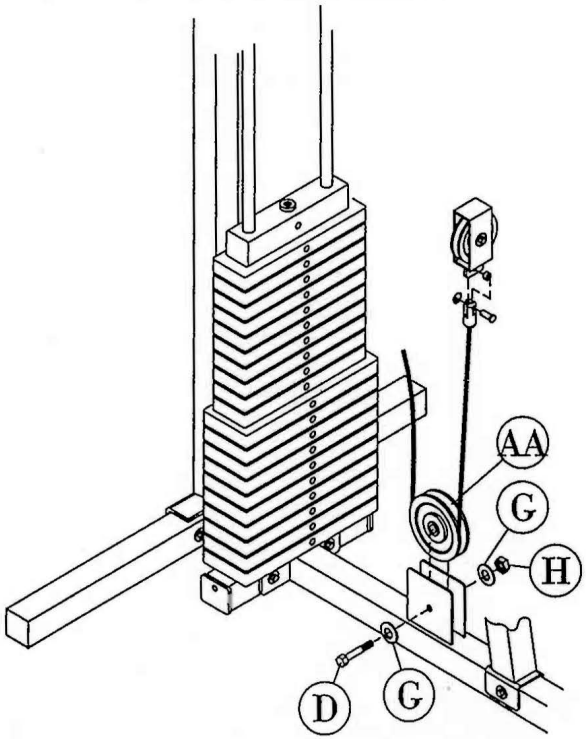

STEP 4

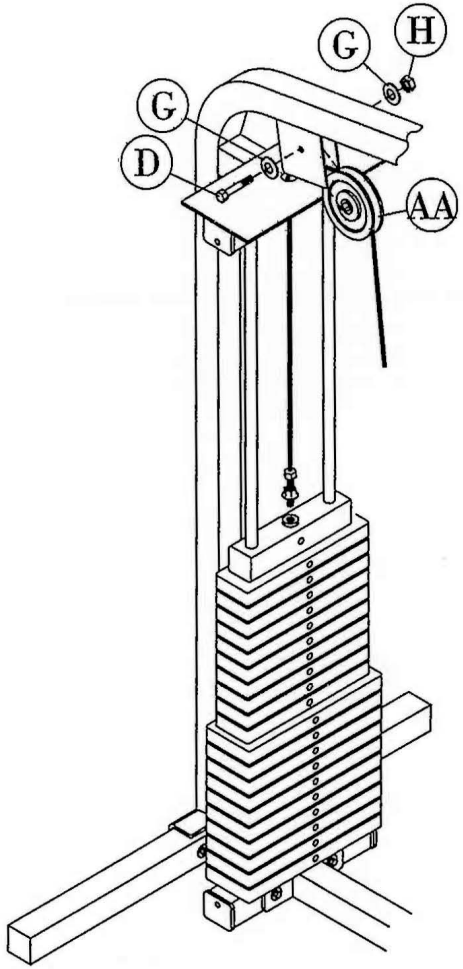

STEP 5

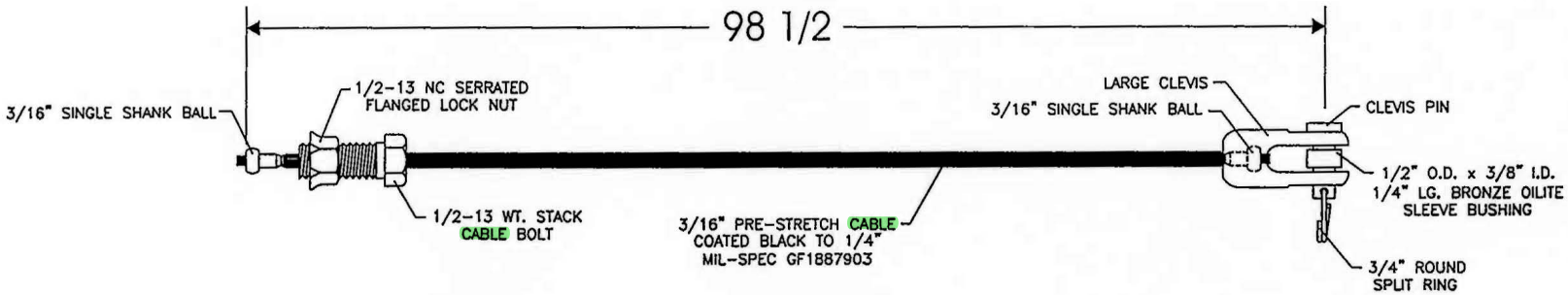

S302
PECTORAL FLY

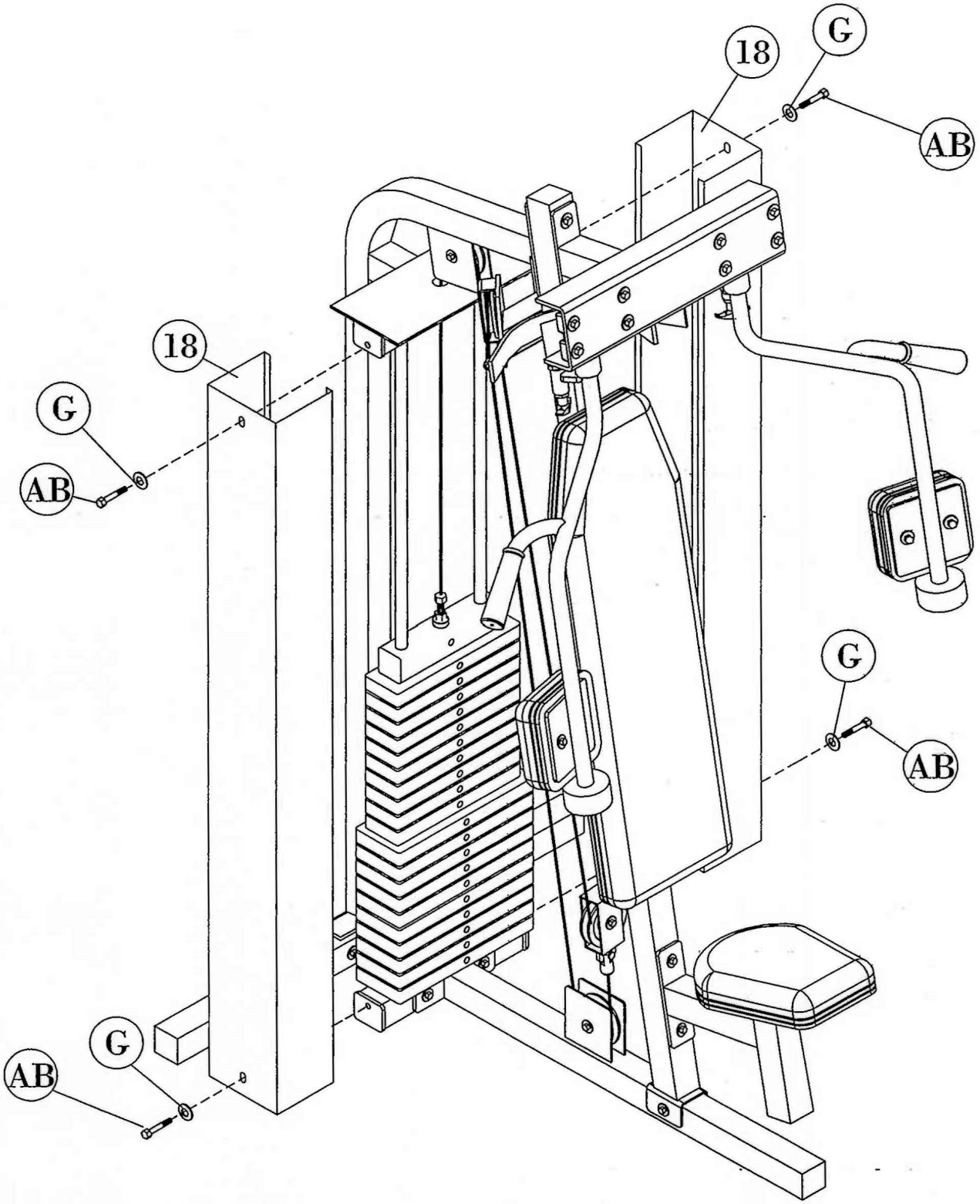

S302
PARTS LIST

Key No.	Qty.	Part Number	Description
1	1	61-S302-01	Bottom Tube
2	1	61-S302-07	Weight Stack Bottom Assembly
3	1	61-S302-08	Base Member
4	1	61-S302-02	Main Upright
5	1	61-S302-03	Back Pad Upright
6	1	61-S302-09	Seat Assembly
7	1	61-S302-13	Left Pec Arm
8	1	61-S302-12	Right Pec Arm
9	2	61-S302-15	Pec Arm R.O.M.
10	1	61-S302-14	Pec Arm Mount
11	1	61-S302-06	Weight Stack Top Assembly
12	1	26-STD-SWTOP1	Top Weight Plate w/Stem
13	10	26-STD-SW102	8 1/4 lb. Intermediate Plate
14	10	26-STD-SW101	12 1/2 lb. Intermediate Plate
15	2	26-STD-SG111	3/4 Dia. Guide Rods 53 3/4 lg.
16	1	26-STD-SX125	Single Floating Pulley Bracket
17	1	61-S302-05	Seat Adjust
18	2	26-STD-SSH118	53 3/4 Lg. Shields
19	2	61-S302-16	DOM Spacer 13/16" Long

3302
HARDWARE LIST

Key No.	Qty.	Part Number	Description
A	4	11-HEX-142	1/4" x 2" Hex Bolt
B	4	12-LOK-14	1/4" Lock Nut
C	8	11-HEX-38112	3/8" x 1 1/2" Hex Bolt
D	5	11-HEX-382	3/8" x 2" Hex Bolt
E	7	11-HEX-38234	3/8" x 2 3/4" Hex Bolt
F	4	11-HEX-383	3/8" x 3" Hex Bolt
G	50	13-FLT-38	3/8" Flat Washer
H	24	12-LOK-38	3/8" Lock Nut
I	6	11-HEX-516114	5/16" x 1 1/4" Hex Bolt
J	2	11-HEX-5163	5/16" x 3" Hex Bolt
K	8	13-FLT-516	5/16" Flat Washer
L	3	26-STD-SM128	1/2" Pull Pin (Short)
M	4	14-BRG-RAD1PILP	Pillow Block Bearing
N	4	14-SCC-1	1" Shaft Collar
O	2	14-BSH-GRD34	3/4" Guide Rod Snap Bushing
P	2	26-STD-SM200	Quick Release Cable Lock
Q	1	16-CAP-112112	1 1/2" x 1 1/2" End Cap
R	4	16-CAP-22	2" x 2" End Cap
S	2	19-GRP-78514T	Tapered Grip
T	2	19-WSB-1123	1 1/2" Rubber Donut
U	2	19-WSB-123	1/2" Rubber Donut
V	2	14-BRG-NYL1	Nyliner Bushing
W	1	26-STD-SU1034	10" x 34" Tapered Back Pad
X	2	26-STD-SU66	6" x 6" Arm Pad
Y	1	26-STD-SU911	Shell Seat Pad
Z	2	26-STD-PLAS112	Easy Glide Seat Sleeve
AA	5	18-PUL-312	3 1/2" Pulley
AB	4	11-HEX-381	3/8" x 1" Hex Bolt